MOAR STRUDER TOOL HEAD

MOAR STRUDER TOOL HEAD

LULZBOT® TAZ

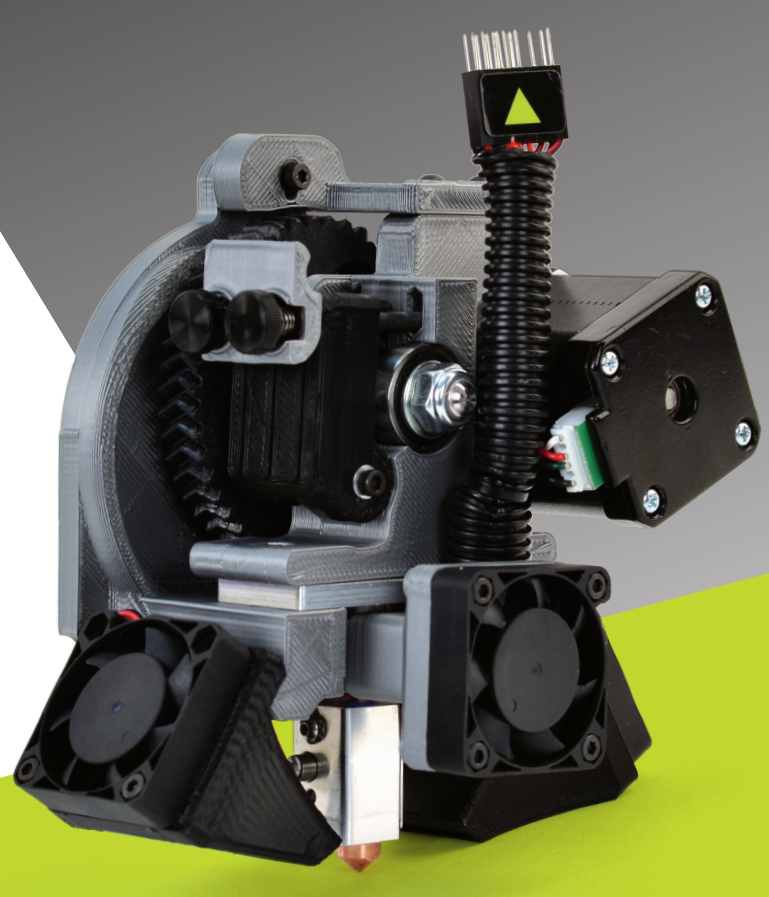

Bigger, Faster, Stronger, MOAR!

- 3D Print up to 100 grams (.22 lbs) per hour!
- Layer heights from .3mm to 1.2mm
- Max. printing temperature 300˚C (572˚F)
- Compatible with many different Fused Filament Fabrication (FFF) materials

SKILL LEVEL ADVANCED

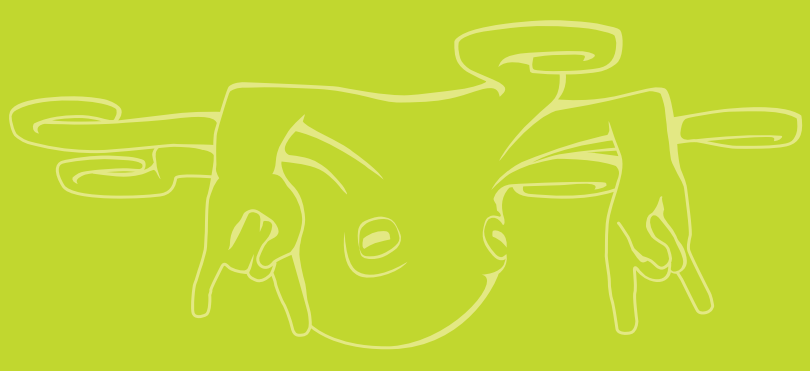

FREE SOFTWARE
LIBRE INNOVATION
OPEN SOURCE HARDWARE

FREE SOFTWARE
LIBRE INNOVATION
OPEN SOURCE HARDWARE

LULZBOT® TAZ

MOAR STRUDER TOOL HEAD

Tool head for LulzBot TAZ 3D printers enabling high-speed, high-strength 3D printing.

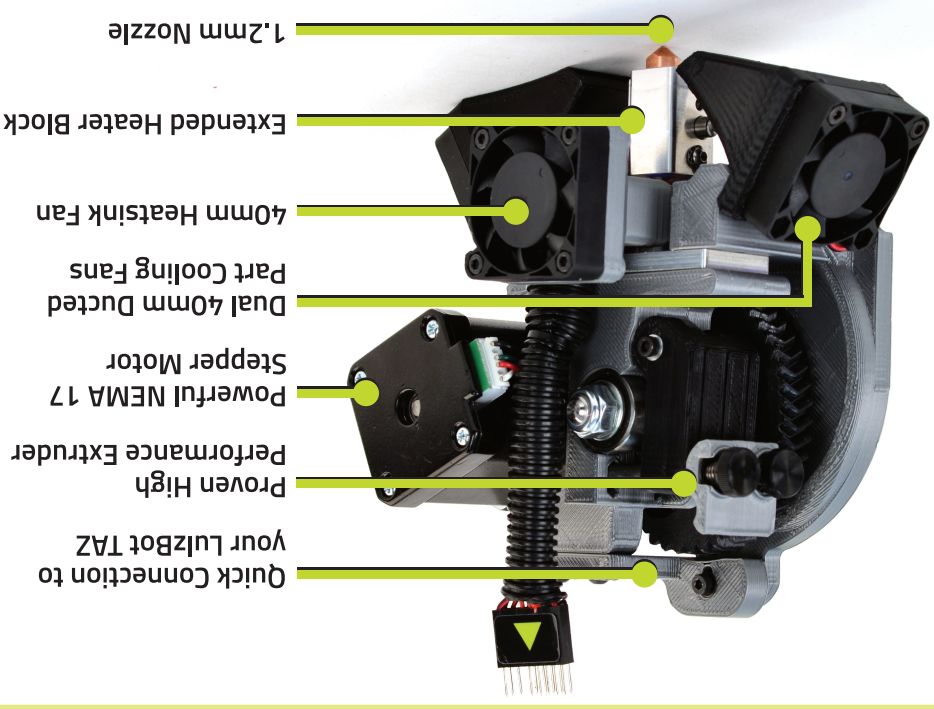

Bigger, Faster, Stronger, MOAR!

- 3D Print up to 100 grams (.22 lbs) per hour!
- Layer heights from .3mm to 1.2mm
- Max. printing temperature 300˚C (572˚F)
- Compatible with many different Fused Filament Fabrication (FFF) materials

In the Box:

- LulzBot TAZ MOARstruder Tool Head
- M3 x 20mm mounting screw and washer
- One (1) sample length of t-glase filament
- PVA-based glue stick

Not Included:

- LulzBot TAZ Desktop 3D Printer
- 2.5mm hex key

Printer Compatibility:

- LulzBot TAZ 6
- LulzBot TAZ 5 with .50mm Nozzle
- Please see the MOARStruder product page at LulzBot.com for information regarding use with earlier generation TAZ 3D printers

Part No: KT-CP0108

8 177520185 1 7

ALEPH OBJECTS® INCORPORATED

OSHW US000053

This packaging was designed with Free Software.
All photos, graphics, and text are licensed CC BY-SA 4.0 International by Aleph Objects, Inc.