Copyright 2015, Aleph Objects, Inc. CC BY-SA 4.0

Revision	Description
IR	Initial release for production
A	Fixed error, chamfer is now on correct side of plate

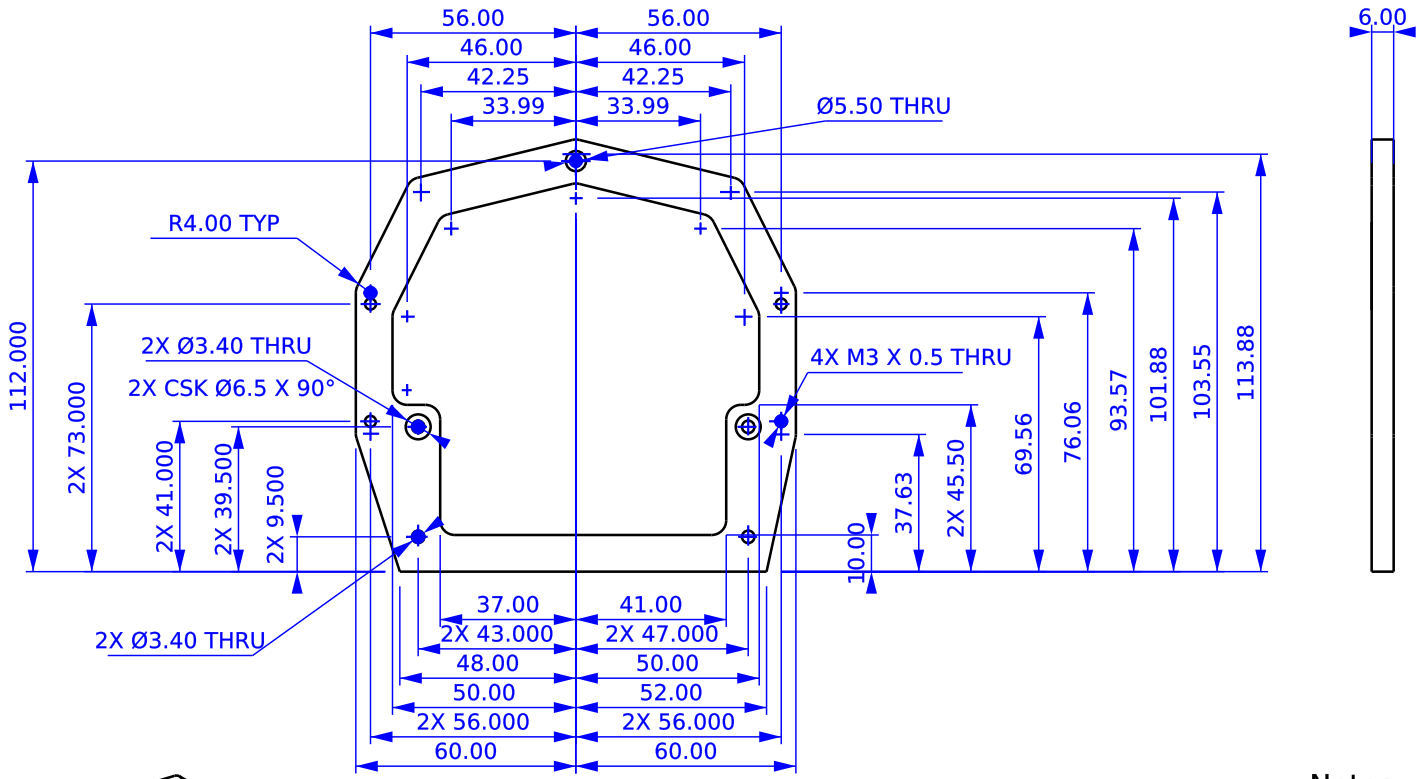

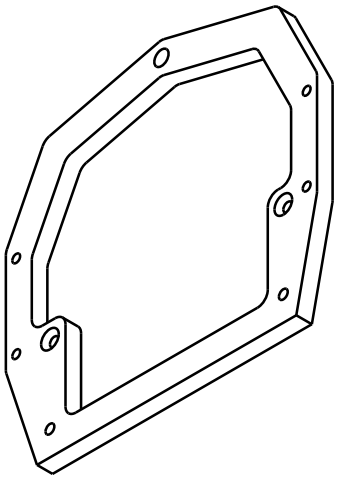

Notes:

1. Parts must be RoHS compliant.
2. Material: 6061 Aluminum
3. Break all sharp edges.

DRAWN BY: BAM	DATE: 11/18/15
MATERIAL: See Notes	

UNLESS OTHERWISE SPECIFIED DIMENSIONS ARE IN MILLIMETERS. TOLERANCES ARE:

DECIMALS	ANGLES
.X±.75	X°±1°
.XX±.25	
.XXX±.125	63
.XXXX±.050	

BREAK EDGES 0.1/0.5
FILLET RADIUS 0.1/0.5

ALEPH OBJECTS INCORPORATED
626 West 66th Street
Loveland, Colorado 80538, USA
Phone +1-970-377-1111
www.alephobjects.com

TITLE
Lower Bracket, Dual V1.1

SIZE	DWG NO.	REV.
A	PP-MP0086	A

SCALE			SHEET
2:1	DO NOT SCALE DRAWING		1 of 1